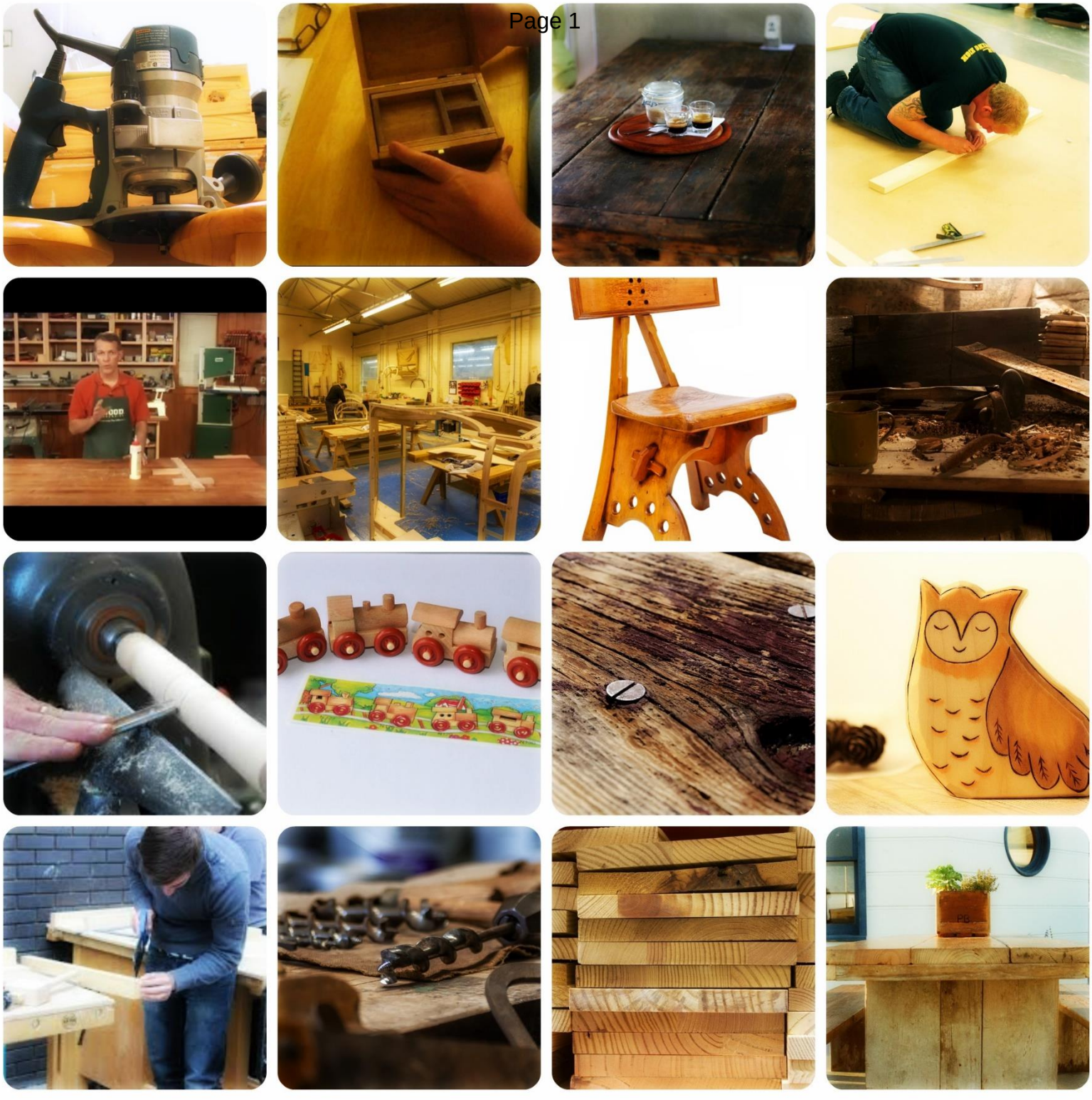

Woodwork Level 3, 3N0589

Student Name:

Student PPSN:

Tutor:

Date:

This e-workbook is by courtesy of

The Woodwork Department

Loughan House Education Centre

Blacklion

Co. Cavan

2016

Print this page.

LEARNER MARKING SHEET		
Learning Outcome	**Assessment Technique**	**Evidence**
1. Select the materials, power tools, hand tools, and equipment required to complete a range of woodwork exercises	**Skills Demonstration & Collection of Work**	**Pages 9, 11 to 18**
2. List the safety mechanisms for a limited range of power tools	**Collection of Work**	**Pages 17, 18**
3. Maintain tools and equipment correctly	**Skills Demonstration**	**Pages 11 to 21**
4. Use correct language and terminology to describe tools, equipment, and processes	**Skills Demonstration & Collection of Work**	**(Pages 6 to 30) From Page 44**
5. Follow drawings, sketches, templates, instructions and other aids to mark out, measure and prepare cutting lists and work pieces, using appropriate marking and measuring tools	**Skills Demonstration & Collection of Work**	**Pages 6, 7, 8, 19 to 27 + drawing/s, From Page 44**
6. Use a range of electrical, cordless and hand tools to include an awl, marking gauge, vice clamp, planes, chisels, drills, routers, saws and sanders	**Skills Demonstration**	**(Pages 11 to 18) From Page 44**
7. Follow manufacturer's instructions when changing saw blades, belts, guides and bit blades	**Skills Demonstration**	**From Page 44**
8. Cut wood to given specification using the correct saw type and blade size	**Skills Demonstration**	**From Page 44**
9. Estimate quantity of materials required to complete a specific project in wood	**Collection of Work**	**Pages 7, 8**
10. Complete projects using a variety of methods including adhesives, glue, nails, screws, dowels and pins	**Skills Demonstration**	**(Pages 19 to 27) From Page 44**
11. Apply appropriate health, safety and personal hygiene procedures when using materials, power tools, and hand tools	**Skills Demonstration**	**Throughout the course**

This is to state that the evidence presented in the attached portfolio is complete and is the work of the named Learner.

Learner's Signature: _____ Date: _____

Assessor's Signature: _____ Date: _____

External Authenticator's Signature: _____ Date: _____

PROGRAMME OVERVIEW

Aims and Objectives of the Programme Module
This programme module aims to provide you with the opportunity to make artefacts from wood and in doing so to use many different woodworking tools and processes.

Objectives:

- To interpret drawings and sketches and translate the information contained in them into a completed artefact made from wood
- To choose the appropriate tool or material to use for measuring the wood, marking it out, cutting it and joining it
- To apply appropriate safety procedures when working with wood and using hand, cordless and power tools
- To acquire an appreciation of the character and features of wood through completing a number of simple artefacts
- To apply simple mathematical problem solving processes to estimate the quantity of materials required and to produce a cutting list

MARKING SCHEME AS FOLLOWS:

SECTION	Weighting:
Theory & Collection of Work	20%
Skills Demonstration	80%
TOTAL	100%

You will be practising during class time and all areas of the course will be covered. However, there will be some work which will have to be done in your own time, e.g. theory. It is your responsibility to attend classes regularly and to keep up with all assigned work. You will need to be in attendance for all assessments. If you unable to do an assessment, you will need to fill in a form, outlining the reasons for your absence and include relevant documentation. This form is available from your tutor and a decision for late assessment will be made by the Centre Head. If you experience any difficulties during the course, please inform the tutor.

Signed: _____ **Date**: _____

Assessment Brief 1

Course:	Woodwork Level 3
Course Code:	3N0589
Assessment:	Collection of work
Title:	Theory
Weighting:	20%

Guidelines:

You will be expected to:

1. Describe the steps in designing and creating an artefact from wood.
2. Describe the selection of the materials, power tools, hand tools, and equipment required to complete a range of woodwork exercises.
3. List the safety mechanisms for a limited range of power tools to include: the router, the jig saw and the sander.
4. Follow drawings, sketches, templates, instructions and other aids to mark out, measure and prepare cutting lists and work pieces, to include:
   - Interpreting drawings and/or sketches to identify information needed to make an artefact
   - Preparing cutting lists for each artefact.
5. Estimate quantity of materials required to complete a specific project in wood.
6. Use correct language and terminology to describe tools, equipment, and processes.
7. Describe a range of electrical, cordless and hand tools to include an awl, marking gauge, vice clamp, planes, chisels, drills, routers, saws and sanders.
8. Apply appropriate health, safety and personal hygiene procedures when using materials, power tools, and hand tools.

Assessment criteria:

- In completing the above tasks, ensure that all answers are clear.
- Ensure that your own woodwork project/s are referred to in completing the tasks.
- Extra documents, when requested, must be included, e.g. drawings.
- Ensure that all health, safety and personal hygiene procedures are considered throughout.

Submission Date:

I confirm that this is my own original work.

Signed: ***Date:***

Your artefact/s

You are going to design a child's chair similar to the photograph below OR a piece of furniture OR small project using wood as its principal part.

1. Describe your proposed artefact/s. For Example: child's chair, model harp, jewellery box, spice rack, stool etc. (*See Appendix 1 for ideas)

Example:

A child's chair (Artefact 1), back & seat are plaques (Artefact 2)

Example of materials available	
Solid Red Deal	250mm X 42mm
Mahogany	250mm X 42mm
M.D.F.	Sheets 2.4m X 1.2m
Plywood	Sheets 2.4m X 1.2m

List other materials you have available

2. List the criteria in designing the project, e.g. height, width, depth

3. Sketch out your project on a separate sheet. Include this with your portfolio.

Example:

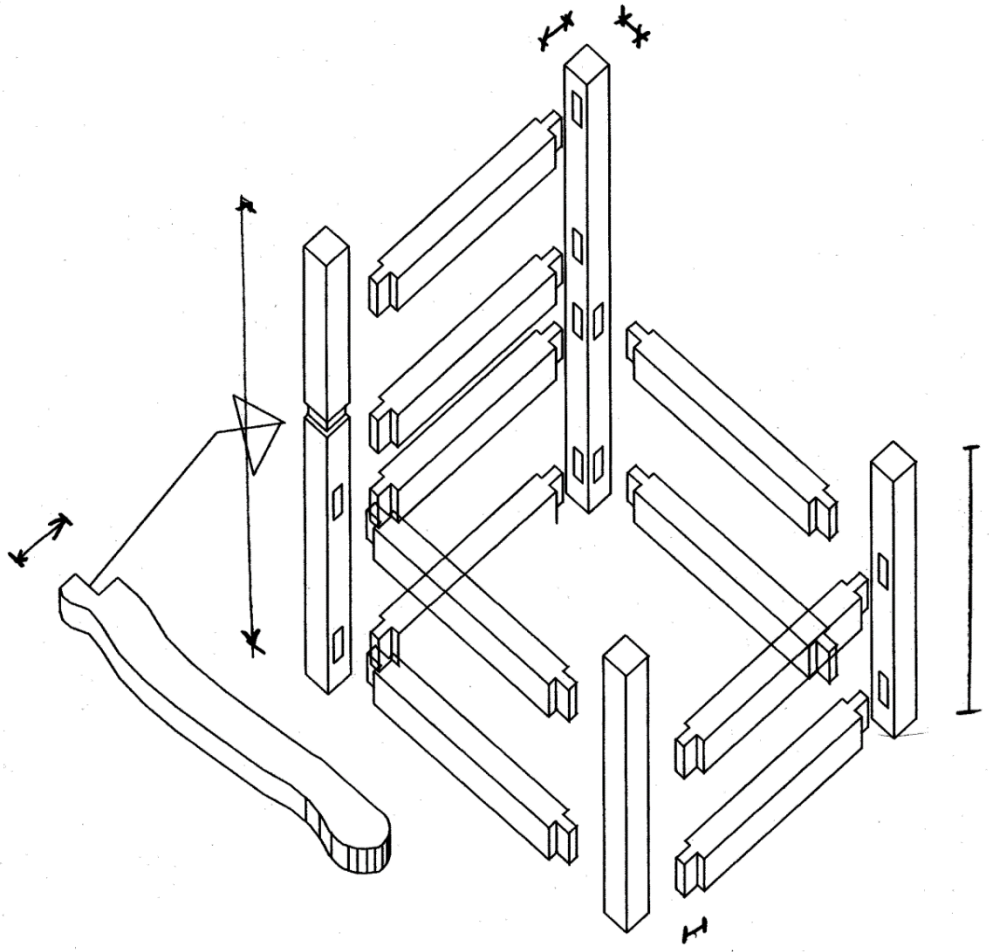

Childs Chair

Scale 1;10 approx

4. Fill in the cutting list for your project.

If you are making a child's chair, fill in the cutting list below. If you are making a different artefact, fill out the second table:

CUTTING LIST FOR CHILDS CHAIR-----Cutting List

DESCRIPTION	MATERIAL	No. Of	LENGTH	BREADTH	THICKNESS
Front Legs	Red Deal	2	mm	mm	mm
Back Legs	Red Deal	2	mm	mm	mm
Rails	Red Deal	10	mm	mm	mm
Arm Rests	Red Deal	2	mm	mm	mm
Seat	MDF	1	mm	mm	mm
Back	MDF	1	mm	mm	mm

Fill in the cutting list for your project:

CUTTING LIST FOR _____

DESCRIPTION	MATERIAL	No. Of	LENGTH	BREADTH	THICKNESS
			mm	mm	mm
			mm	mm	mm
			mm	mm	mm
			mm	mm	mm
			mm	mm	mm
			mm	mm	mm

Materials available

Making boards and sheets from wood or wood products:

- Veneers
- Sawdust
- Wood fibres
- Wood strips
- Wood flakes

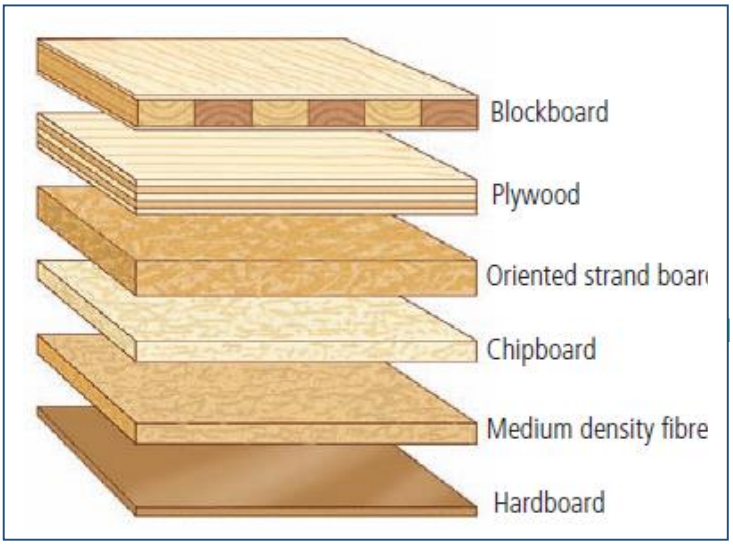

1. Do you have other materials available?

Pineboard/Lamwood

- Made from thin softwood strips, glued together
- Makes a wide board in softwood
- Uniform thickness (12 – 25mm)
- Boards tend to cup
- Useful for projects
- Hardwood examples can be obtained
- Sheets very expensive

2. State 4 advantages of manufactured boards.

Advantages of manufactured boards:

- Large sheet sizes
- Cover large areas easily
- Uniform thickness
- Stable – no shrinkage
- Do not warp
- Use woods efficiently
- Little waste
- Often veneered over – helps to save the rainforests

Timber Selection

- Low cost
- Little waste
- Fast and easy method
- Boards likely to cup

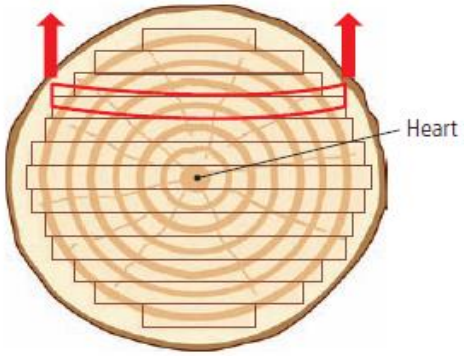

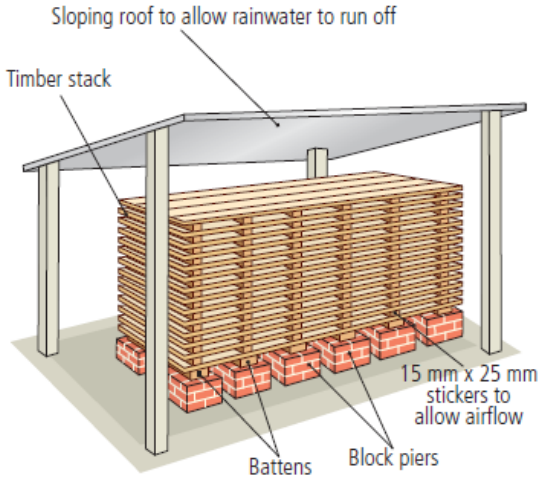

List 2 advantages of Open Air Seasoning.

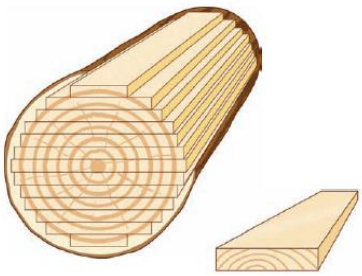

Look up:
Seasoning

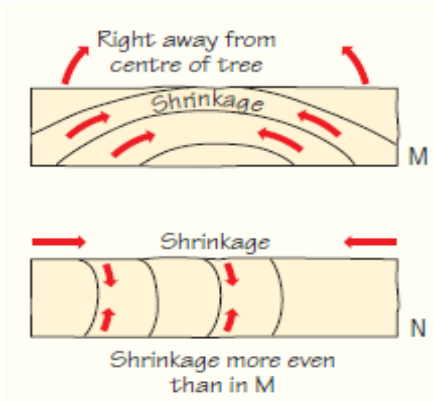

The board most likely to cup is board M. This is because when the wood begins to dry, the cells shrink. The shrinkage occurs along the rings, which tends to pull the board into a curved shape as a result. The other board, N, will have more even shrinkage because of the arrangement of the rings as shown.

Open Air Seasoning

- No expensive equipment needed
- Little labour cost
- Not energy dependent
- Slow drying process
- Large area required
- Depends on the weather
- Cannot be controlled
- Only dries to 20% – 22%

Kiln Dry Seasoning

- Dries more quickly
- Final moisture content is lower
- Can be properly controlled
- Defects associated with seasoning are minimised
- Heating the kiln uses a lot of energy
- It is an expensive method
- Requires a skilled operator

Hand Tools

What tools are needed to complete the project? Name a few from the image below.

Use a range of electrical, cordless and hand tools to include an awl, marking gauge, vice clamp, planes, chisels, drills, routers, saws and sanders and terminology to describe tools, equipment, and processes.

1. Bradawl

The bradawl is used for:
Making pilot holes in wood for small nails and screws

a) Prevents the wood from _____ when a screw or nail is driven into the wood

b) Marks the spot where a hole has to be drilled for _____ joint

c) Name the tool shown and state its use.

2. Marking gauge

The marking gauge is used for:

a) Marking two parallel gauge lines

b) Marking mortise and tenon joints

c) Why are there 2 pins?

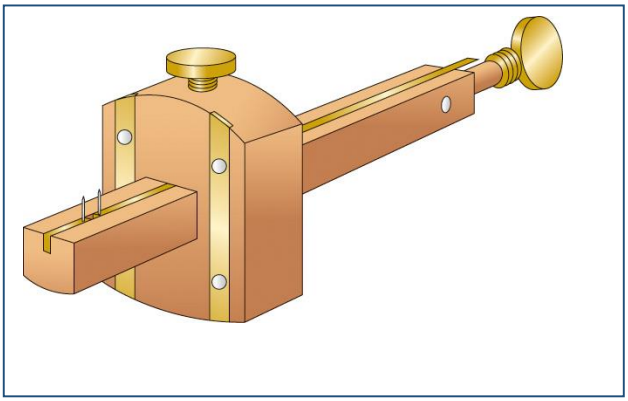

Name the tool shown and state its use.

3. Try square

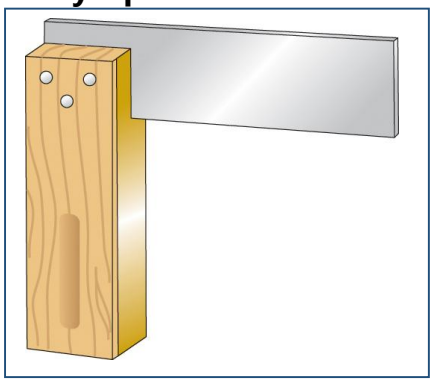

The try square is used for:

a) Drawing lines accurately around a piece of wood

b) For testing the _____ of a piece of wood

c) Name 3 parts of a Try Square.

4. Sliding bevel

The sliding bevel is used for drawing lines accurately at an angle across a piece of wood

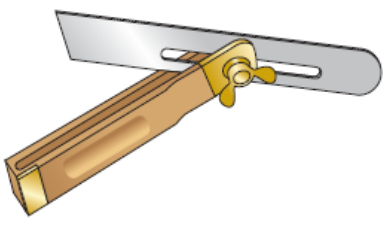

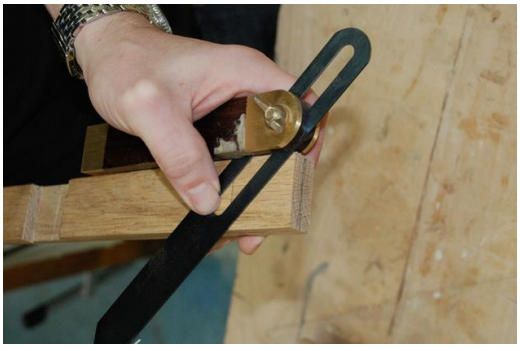

5. Planes

Smoothing plane

What is a smoothing plane used for?

You can look up planes.

Describe two methods of planing end grain to avoid damaging the piece.

a) Plane from

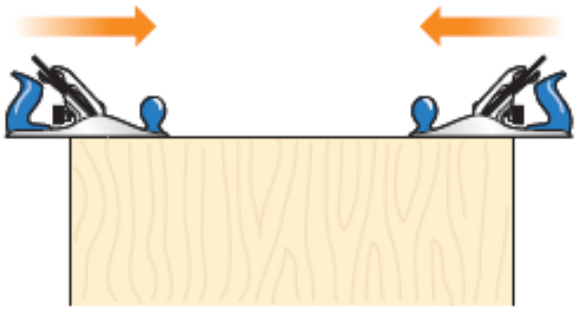

b) Clamp a _____ to the board.

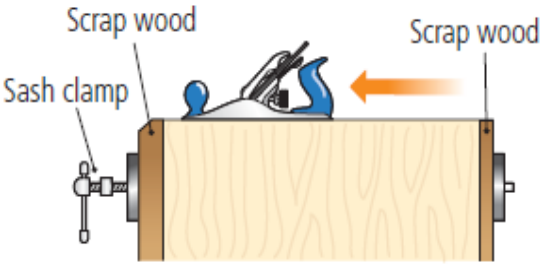

c) When planing wood, what makes the shavings curl?

Label this:

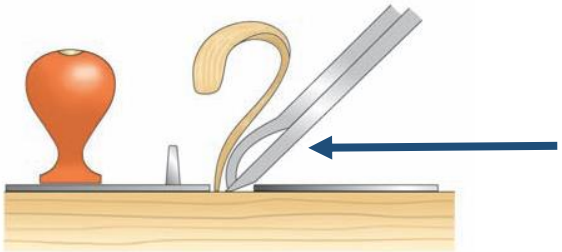

d) Name the parts of the plane shown:

handle, lever cap, toe, blade adjusting screw, heel

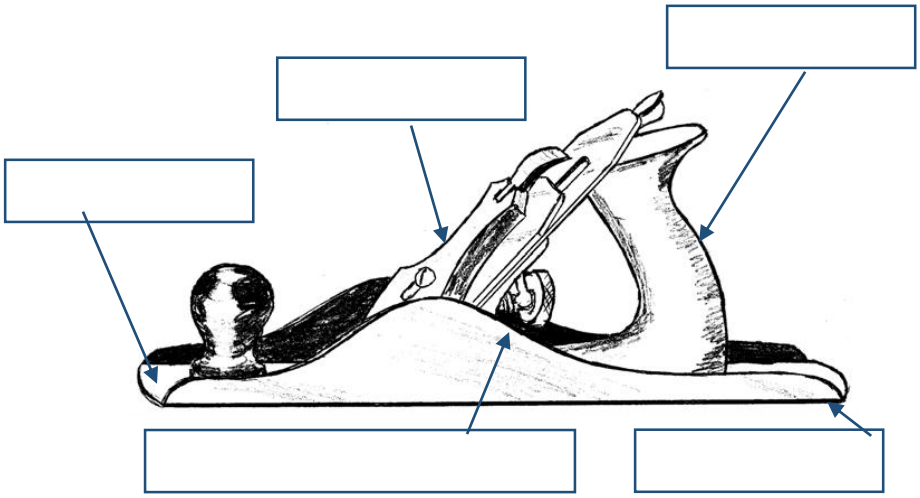

9. Chisel

What is the purpose of the bevelled edge on the bevelled edge chisel?

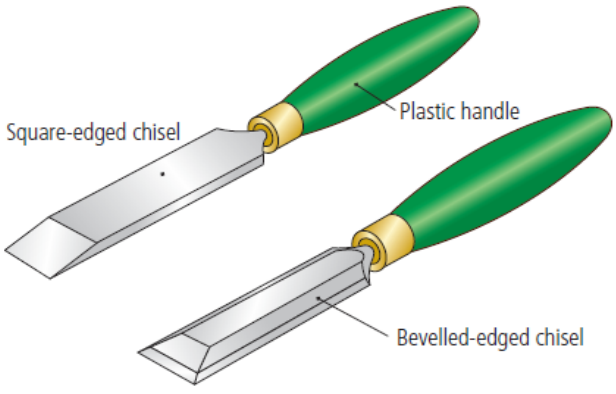

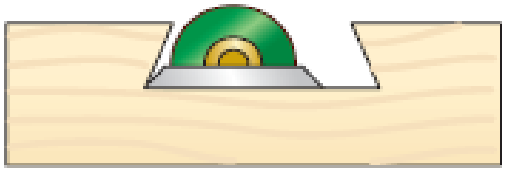

The bevelled edges allow the chisel to fit into tight corners such as a dovetail.

10. Hand Drill

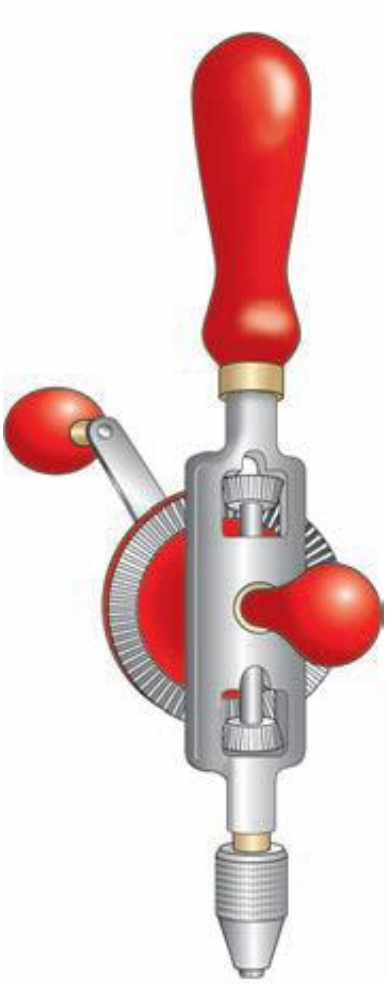

The hand drill is used for:

- Drilling holes of small diameter in wood
- Holding a countersink bit

- When drilling a piece of wood, how do you prevent the bit damaging the piece?
- Reverse the piece and drill from the back or

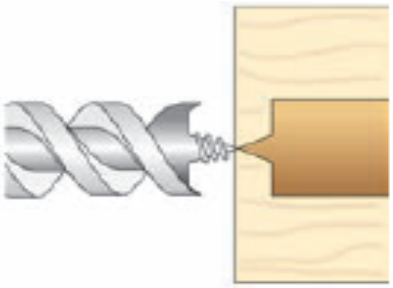

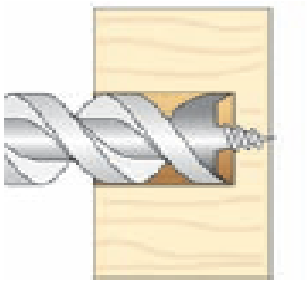

11. Saws

a) Name the tools shown.

- Hand saw
- Coping saw
- Tenon saw
- Pad saw

b) Label the tenon saw:

brass stiffening rib, handle, teeth, screws/rivets, steel blade

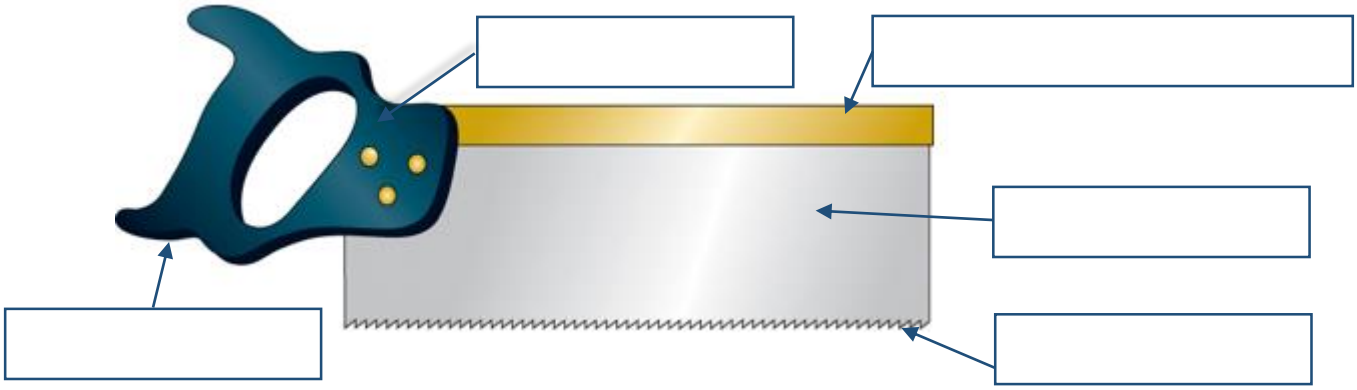

c) List the steps that should be taken to change the blade of the coping saw.

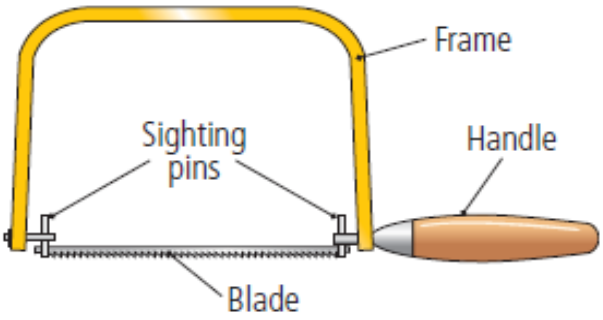

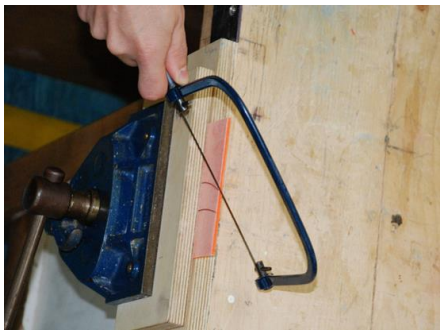

- Slot the new blade into the sighting pins
- The teeth point back towards the handle
- Retighten the handle
- Line up the pins by sight so that the blade is straight

Put a number in the box for the sequence 1-4 below

☐ Retighten the handle

☐ Slot the new blade into the sighting pins

☐ Line up the pins by sight so that the blade is straight

☐ The teeth point back towards the handle

Power Tools

1. Cordless drill

a) Name the parts of the power tool shown.

keyless chuck, battery, forward/reverse button, trigger switch

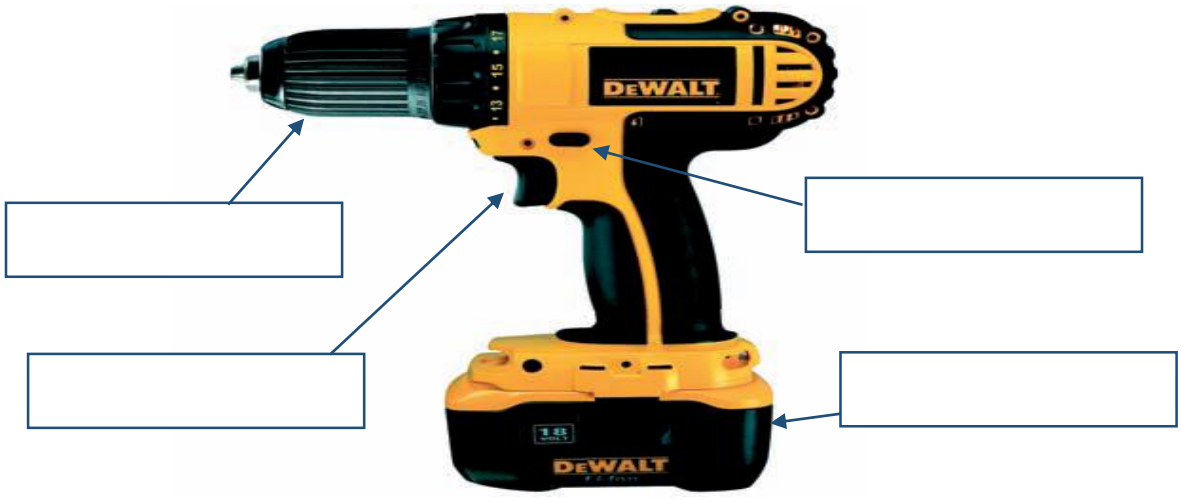

b) Name 2 safety precautions to be followed when uing this power tool:

2. The Jigsaw

Safety precautions when using the jigsaw:

- Wear eye protection
- Keep fingers away from the blade
- Unplug the jig saw when changing the blade
- Ensure the power cable is always behind and away from the cutting blade
- Support the piece of wood being cut correctly in a vice or clamp
- Ensure the base plate of the jig saw is firmly on the wood before turning on the saw.

Give two safety precautions to be followed when using this power tool

firmly in, eye

Work must be held the bench.

Wear protection.

3. The router

Safety precautions when using the router:

- Wear eye and ear protection
- Ensure there is a firm grip on the router when it is being used
- Concentrate on the job in hand and do not get distracted by what else is going on in the woodwork room
- If using a plunge router ensure the piece of wood is properly secured in a vice or clamp
- Always unplug the router when adjusting the bit or depth of cut
- Work from left to right
- Ensure the router bit is properly installed in the machine
- Allow the router to stop spinning before putting it down out of your hands

Complete these sentences using these words: **cutter, Eye protection, Disconnect**

_____ must be worn.

_____ when not in use.

Keep the _____ facing away from yourself and others.

4. **The sander**: belt sander, orbital sander or bench sander

Safety precautions when using a sander:

- Wear a dust mask
- Ensure the room is well ventilated
- Always unplug the sander when changing the sandpaper belt, pad or disc
- Empty the dust bag frequently
- Ensure there are no screws or nails protruding from the wood being sanded
- Take regular breaks from using the sander
- Ensure the piece of wood being sanded is properly secured using a vice or clamp

List two safety precautions that you would take when using this sander

Project Construction

1.Joints used

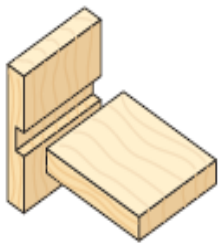

Housing joint ☐

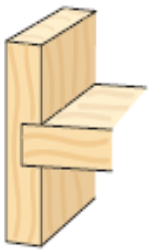

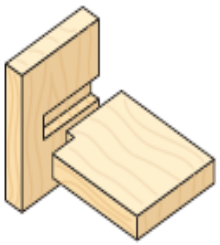

Stopped housing joint ☐

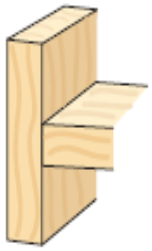

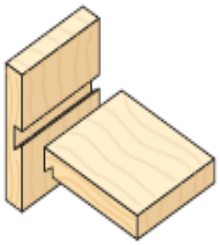

Dovetail housing joint ☐

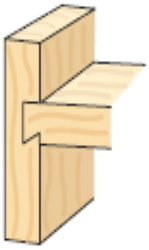

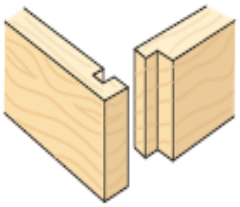

Tongued and grooved joint ☐

Corners of drawers ☐

a) Tick the joints you used in your project.

Dowel joint

A dowel joint is

- Used in place of mortise and tenon
- A wooden cylinder
- Used with a dowelling jig

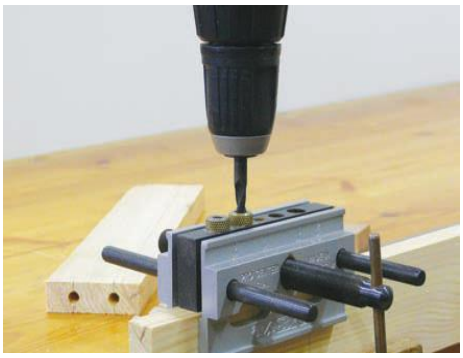

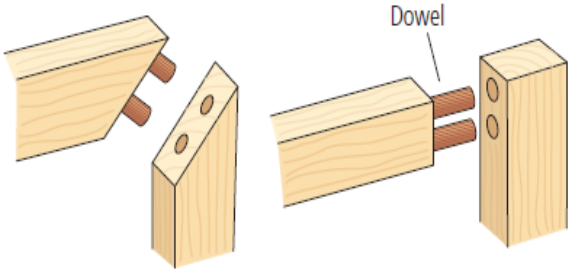

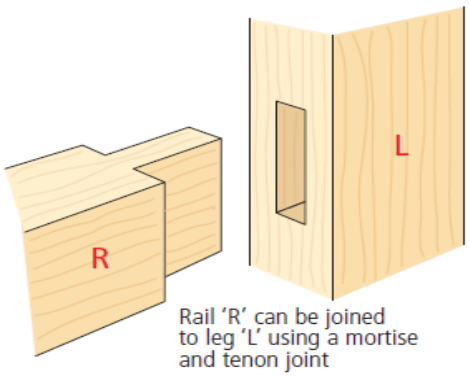

Rail 'R' can be joined to leg 'L' using a mortise and tenon joint

b) Explain a dowel joint.

2. Cutting a mortice

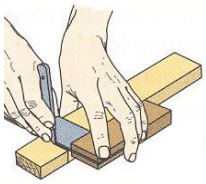

Mark shoulder lines

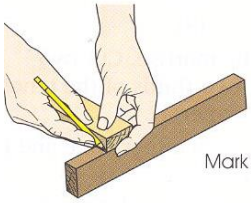

Mark mortise position

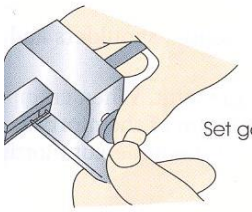

Set gauge to width of chisel

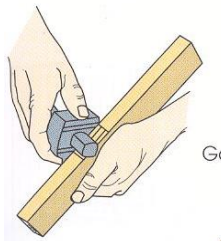

Gauge mortise

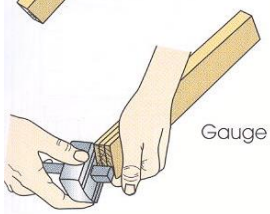

Gauge tenon

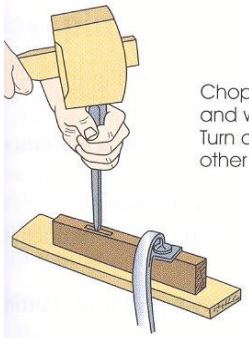

Chop mortise, start at centre and work towards ends. Turn over and complete from other edge

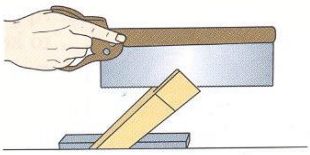

Saw diagonally down tenon lines

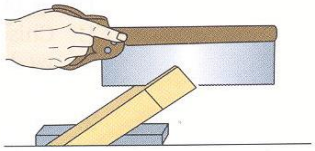

Reset and saw down tenon lines from other edge

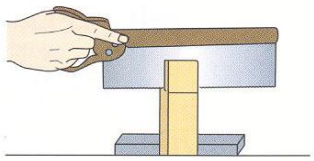

Saw down to shoulder using diagonal cuts as a guide

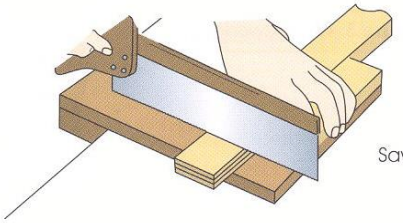

Saw shoulder lines

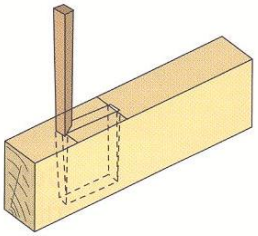

Chop wedge tapers

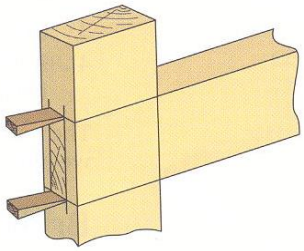

Drive wedges evenly to keep member in right position

Name 1 situation where you might use the above.

3. Types of screws

a) Name the types of screw.

Raised head, Round head, Countersunk head

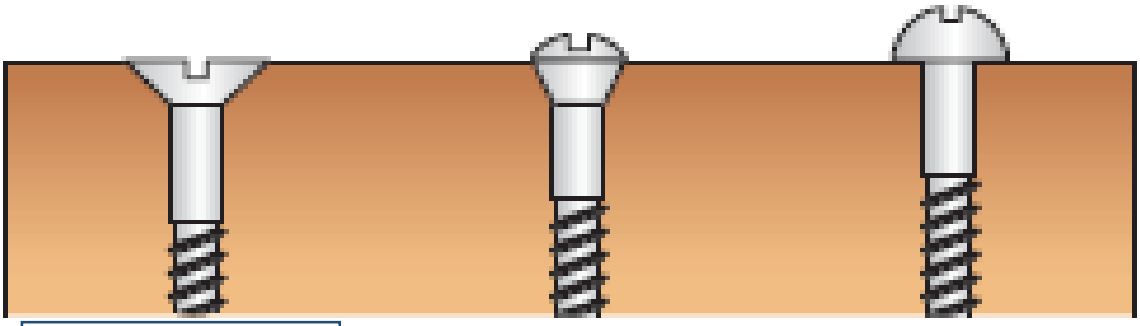

b) Which, if any, did you use?

Screws and plugs

The screw is hidden with a round wooden plug.

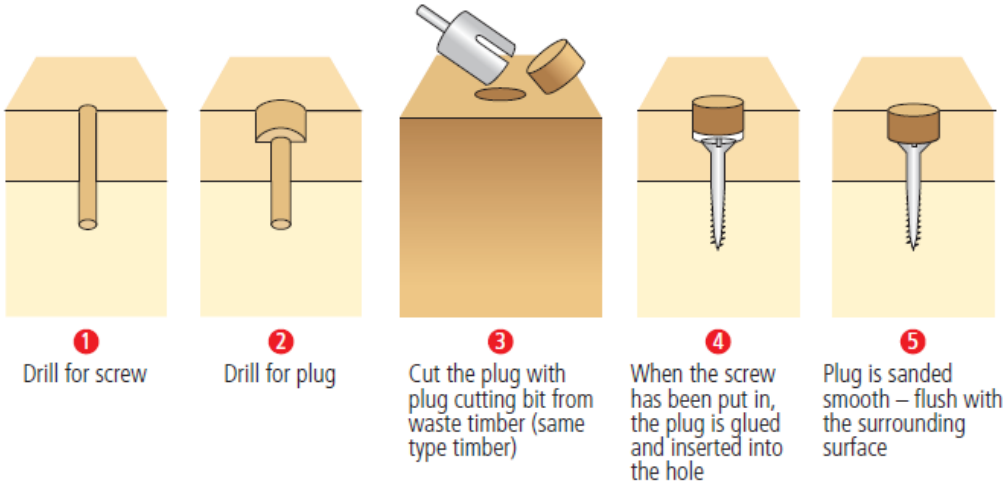

c) Name 1 situation where you might use the above.

4. Types of adhesive

- Scotch glue/pearl glue
- PVA glue
- Casein glue
- Contact/impact glue
- Formaldehyde glue
- Epoxy resins
- Aliphatic (yellow) glue
- Superglue
- Hot melt glue

PolyVinyl Acetate (PVA)

- Water soluble
- Water-resistant types available
- Ready to use from container
- Strong bond
- Requires cramps
- Sets in 4 – 12 hours
- Mainly used for bonding wood

PVA glue

Which glue did you use and why did you choose this one?

5. Assembly

- Fit joints without glue and check
- Apply glue to pieces
- Assemble joints carefully
- Cramp pieces lightly and firmly
- Wipe off all excess glue with a clean damp cloth
- Check for square

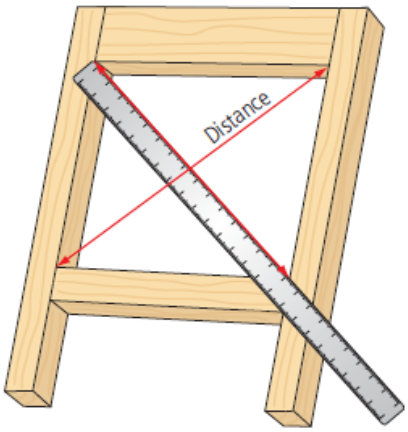

How did you check for squareness?

6. Surface finish

- Rub out/remove pencil lines
- Scratches and marks can be removed using a scraper
- Punch nails and pins
- Fill nail holes and small cracks using a suitable wood filler
- Sand the surfaces smooth using sandpaper
- Sand end grain
- Start with 100 grit (medium) sandpaper, then with 180 grit and finally 320 grit (very fine)
- Always sand with the grain – avoid scratching the surface
- Brush off all dust or use a tack cloth

You can look up wood finishing.

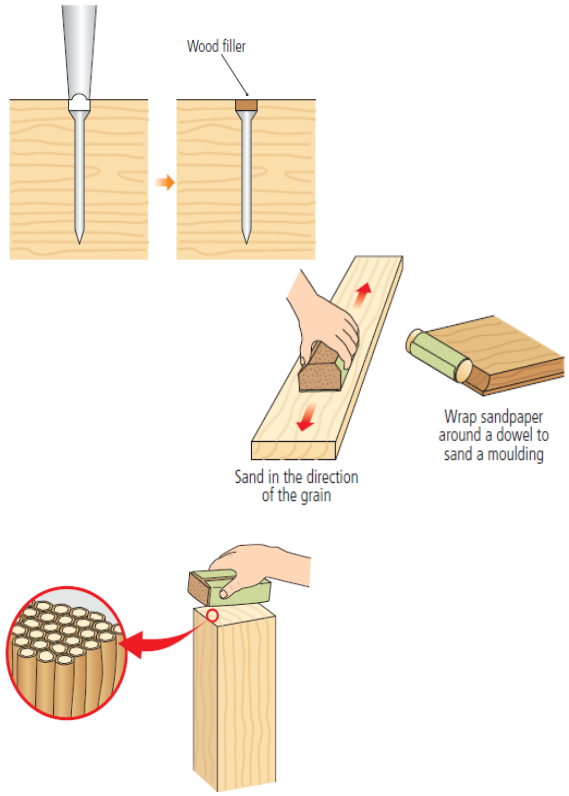

a) Why do we sand with the grain?

b) Label these types of sandpaper:
fine, rough, medium

P80

P120

P240

Purpose of a finish

- Protects the wood from wear and tear
- Prevents decay – fungus, insects
- Provides a nice finished surface
- Enhances colour
- Changes the colour (staining)

c) Name 2 advantages of using a finish.

Sandpaper (glass paper)

Composition of sandpaper

- Grit is bonded to the backing paper or card
- The grit size is printed on the back of the sandpaper

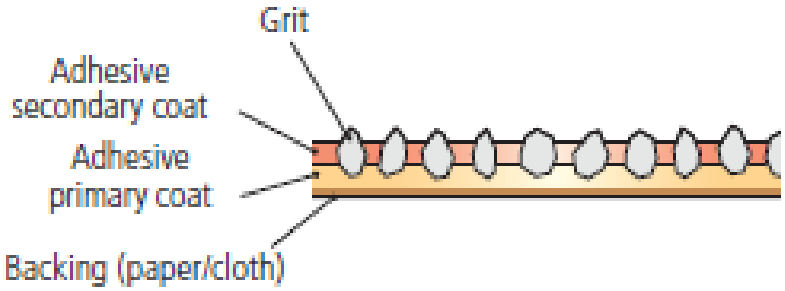

Write 2 things you know about sandpaper.

Varnish

Why choose varnish?

- Water-resistant
- Scratch-resistant
- Easily-cleaned
- Clear finish enhances the grain of the wood
- Resists heat
- Stains/coloured varnish are available

Which did you use?

Varnish – application

- Apply the varnish with a brush/cloth, working with the grain
- Cover all surfaces evenly, with no drips/runs
- When the first coat is applied, allow to dry
- Sand lightly between coats (denib) with very fine sandpaper or fine wire wool
- Apply another coat of varnish evenly and leave to dry again
- Repeat the process until you have three coats applied

How many coats of varnish should be applied?

Other oils & finishes

- Apply with a cloth, work oil well into the grain
- Apply two or three coats and leave to dry overnight
- De-nib any rough surfaces using light sandpaper
- Apply another three coats of oil
- Gradually build up the finish using the above process

Why is it necessary to apply a finish to a wooden artefact?

You can look up Danish oil.

Complete the sentences using the words below, stating why it is necessary to apply a finish to a wooden artefact.

prevents, protects, seals, appearance

It _____ the wood.

It _____ dirt getting in.

It enhances the _____ of the piece.

It _____ the wood from wear and tear.

Answer the questions:

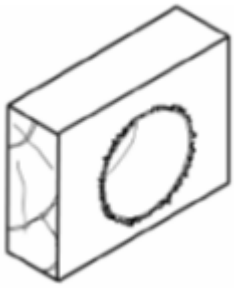

1. The boring of a hole through the piece of timber shown in the diagram has left rough, jagged edges. Suggest one method that could be used to prevent this happening.

2. The blade of a chisel has become damaged and needs to be sharpened. Using the numbers 1, 2 and 3, place the following steps in the correct order:

   ☐ Honing

   ☐ Burr removal

   ☐ Grinding

3. The blade of a coping saw is held in place with which of the following forces?
   a) Compression
   b) Tension
   c) Torque

   Answer: ☐

4. The diagram shows a tenon saw and a close-up view of its teeth. Every second tooth is bent left and right. What is this feature called? Why is this feature necessary?

5. Write the name of each type of nail in the boxes provided.

6. From the list, select the correct name for the screw shown in the diagram.

Round head
Countersunk head
Raised head

Answer:

7. What is the correct name for this method of nailing?

What is the advantage of this method of nailing?

Evaluation of completed item:

Include images/photos of your completed item/s.

1. Does the finished project fit the function it was designed for? Explain.

2. How did you feel it turned out?

3. Identify one pleasing aspect of the finished item.

4. What was difficult about this project?

5. What was the cost of the materials involved?

6. How much would the product sell for in a shop?

7. What other type of craft items could you make with the skills you have learned to date?

8. What changes would you make to the project if you were to make it again?

Assessment Brief 2

Course:	Woodwork Level 3
Course Code:	3N0589
Assessment:	Skills Demonstration
Title:	Practical
Weighting:	80%

Guidelines

You will be expected to:

1. Select the materials, power tools, hand tools, and equipment required to complete a range of woodwork exercises.
2. Use correct language and terminology to describe tools, equipment, and processes.
3. Follow drawings, sketches, templates, instructions and other aids to mark out, measure and prepare cutting lists and work pieces, to include:
   - Interpret drawings and/or sketches to identify information needed to make an artefact
   - Prepare cutting lists for each artefact
4. Use a range of electrical, cordless and hand tools to include an awl, marking gauge, vice clamp, planes, chisels, drills, routers, saws and sanders and terminology to describe tools, equipment, and processes.
5. Use a range of electrical tools to include a router, a jig saw and a sander.
6. Use a range of hand tools to include an awl, a marking gauge, a vice clamp, a plane, a chisel and a saw.
7. Use a cordless drill.
8. Follow the manufacturer's instructions when changing saw blades, belts, guides and bit blades.
9. Cut wood to given specification using the correct saw type and blade size.

10. Complete projects using a variety of methods including adhesives, glue, nails, screws, dowels and pins. This includes stabilising and finishing the artefacts and applying the appropriate finish to the completed item.
11. Evaluate the craft item.
12. Apply appropriate health, safety and personal hygiene procedures when using materials, power tools and hand tools.

Assessment criteria

- Ensure the selection of materials, tools and equipment refers to the woodwork project/s being undertaken.
- Demonstrate appropriate health, safety and hygiene procedures when using materials and tools.
- Cut wood to the required specification using at least three of the following saws: Jig saw, Coping saw, Tenon saw, Dovetail saw, Other saw
- Following the manufacturer's instructions when modifying and maintaining the electrical tools.
- Include relevant drawings and sketches.
- Photographic evidence may be required.

Submission Date:

I confirm that this is my own original work.

Signed ***Date***

Assessment Feedback

Learner Name:	
Learner Group: WOODWORK CLASS	
Module: Woodwork Level 3	Module Code: 3N0589
Assessment Title: Theory	Assessment Number: 1
Weighting: 20%	
Comments:	

Tutor: _____

Date: _____

Copyright © 2016 Janna Tiearney, Educoot 33

Assessment Feedback

Learner Name:	
Learner Group: WOODWORK CLASS	
Module: Woodwork Level 3	Module Code: 3N0589
Assessment Title: Skills Demonstration	Assessment Number: 2
Weighting: 80%	
Comments:	

Tutor: _____

Date: _____

Appendix 1: Project Ideas

A money box

- Design a box to hold money/coins.
- It needs to hold enough for three months' savings.
- Find out the sizes of money boxes.
- The money box must be pleasing to look at.
- The money should be secure, e.g. lock or secret opening.
- Measure coins to get the size of the slot.

Coins are stored in jars, milk containers and money boxes.

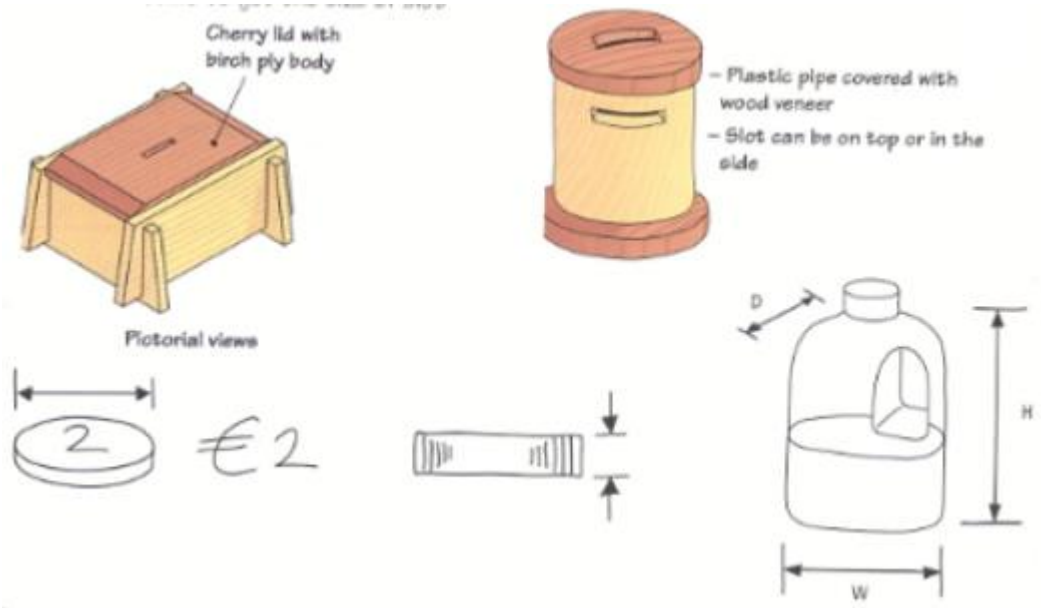

See: Edco Digital

edco DIGITAL
Dynamic digital resources for teachers

Ideas

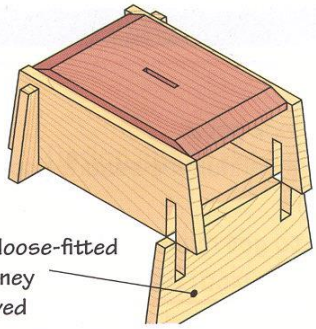

One side is loose-fitted to allow money to be removed

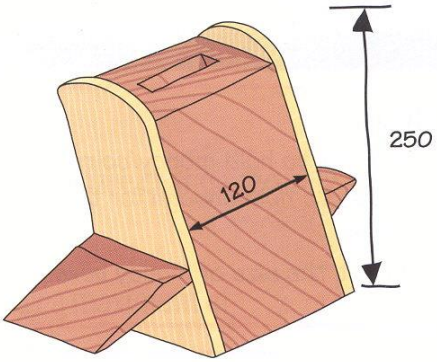

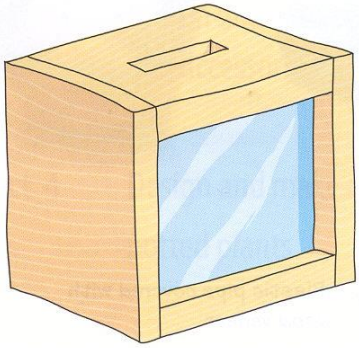

– Plain box with clear plastic front
– Too plain – not decorative

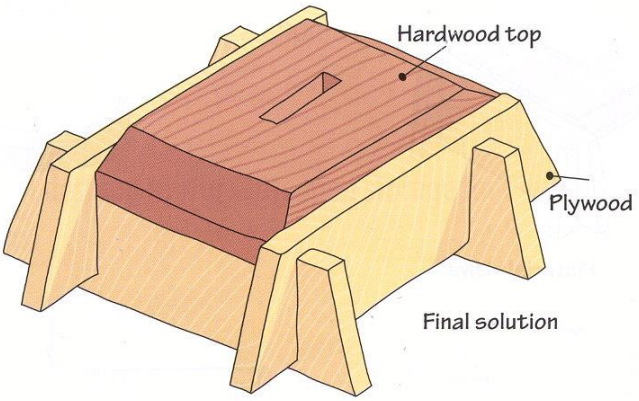

Final solution

See: Edco Digital

edco DIGITAL
Dynamic digital resources for teachers

Working drawings

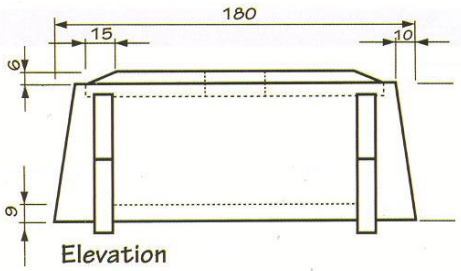

Elevation

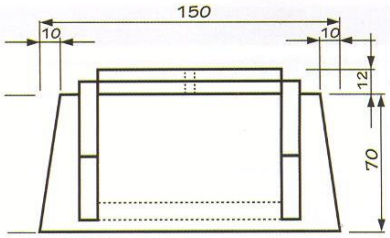

End view

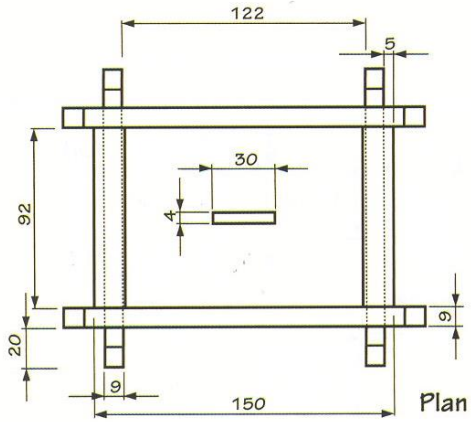

Plan

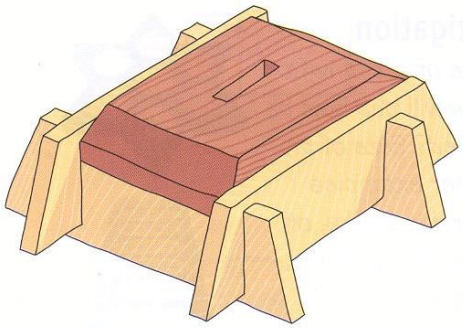

Evaluation

- **Design:** The design was difficult and I found it hard to come up with ideas that were decorative
- **Manufacture:** The joints used are quite simple, but it is very important that they fit accurately
- The wood that I used was slim and so it made the box lightweight
- The base of the box was hard to glue into position
- **Finished piece:** I felt the sliding side for getting to the money was a good idea but the joint must fit firmly
- The two colours of wood added to the decoration

See: Edco Digital

edco DIGITAL
Dynamic digital resources for teachers